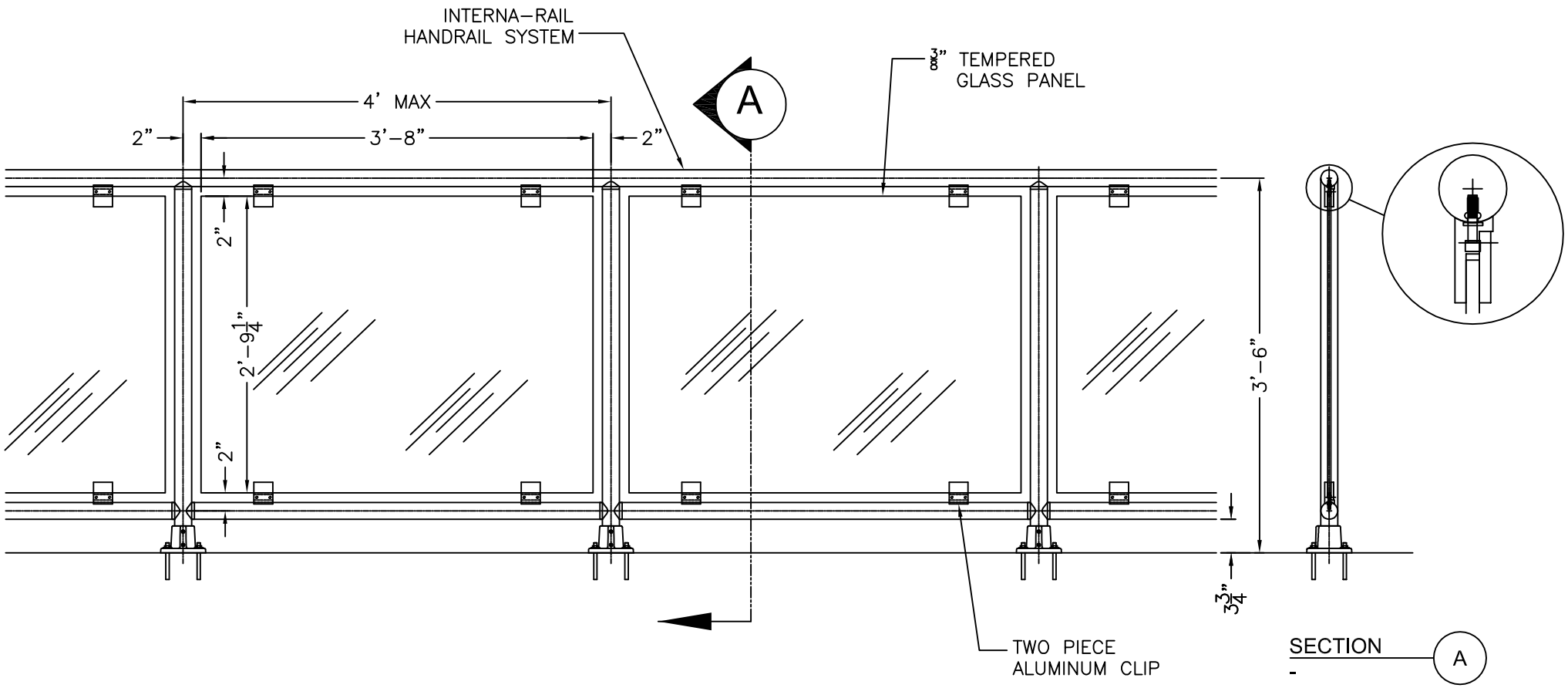

THIS DRAWING AND ALL THE INFORMATION THEREON IS THE PROPERTY OF THE HOLLAENDER MFG. CO., IS CONFIDENTIAL AND MUST NOT BE MADE PUBLIC, NOR COPIED, NOR USED, TO THE DISADVANTAGE OF SAID HOLLAENDER MFG. CO. AND IS SUBJECT TO RETURN ON DEMAND.

COPYRIGHT 2008 ,
HOLLAENDER MANUFACTURING CO.

NO.	REVISIONS	DATE	APPROVED

Hollaender®
STRUCTURAL ENGINEERING GROUP
10285 WAYNE AVENUE
CINCINNATI, OH 45215-6399
PHONE: (800) 772-8800 FAX: (800) 772-8806
WWW.HOLLAENDER.COM

PROJECT	CUSTOMER	DESCRIPTION
		2 PIECE PANEL CLIP w/ GLASS PANELS INTERNA-RAIL 2 LINE RAIL TOP MOUNTING

DRAWN BY: GG	APPROVED BY: BW	DATE: 2-21-08	
PROJECT NO: N/A		SCALE: NTS	
FINISH:		DRAWING NO:	
MATERIAL:		SHEET 1 OF 1	